SAMSUNG CONFIDENTIAL
THIS DOCUMENT CONTAINS CONFIDENTIAL
PROPRIETARY INFORMATION THAT IS
SAMSUNG ELECTRONICS CO'S PROPERTY.
DO NOT DISCLOSE TO OR DUPLICATE FOR OTHERS
EXCEPT AS AUTHORIZED BY SAMSUNG.

SM-M526BR REV03A

SM-M526BR Common

GLOBAL
2021.08.05

Sheet01 : GSM / WCDMA / LTE / NR(N41) RF
Sheet02 : TRANSCEIVER, SUB ANT
Sheet03 : CONNECTIVITY(BT/WIFI/FM), NFC
Sheet04 : AP(SM7325-INTERFACE,GPIO)
Sheet05 : AP(POWER), MEM(uMCP)
Sheet06 : PMIC(PM7325,PM7350C), IF PMIC
Sheet07 : AUDIO Codec, SENSOR, SIM, SD
Sheet08 : CAMERA, DISPLAY PMIC
Sheet09 : DISPLAY, C2C

Engineer:	
Drawn by:	
R&D CHK:	TITLE: SM-A716U
DOC CTRL CHK:	Size:
MFG ENGR CHK:	
QA CHK:	REV: Drawing Number: Page:

Changed by: user33 | Date Changed: | Time Changed:

SAMSUNG CONFIDENTIAL
THIS DOCUMENT CONTAINS CONFIDENTIAL
AND PROPRIETARY INFORMATION OF
SAMSUNG ELECTRONICS CO. LTD. PROPERTY.
DO NOT DISCLOSE TO OR DUPLICATE FOR OTHERS
EXCEPT AS AUTHORIZED BY SAMSUNG.

RF PART 1

MAIN ANT1 LB/MB

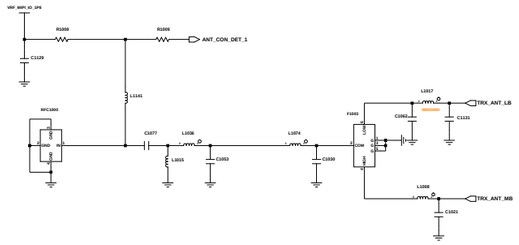

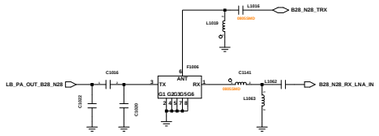

B28 DPX

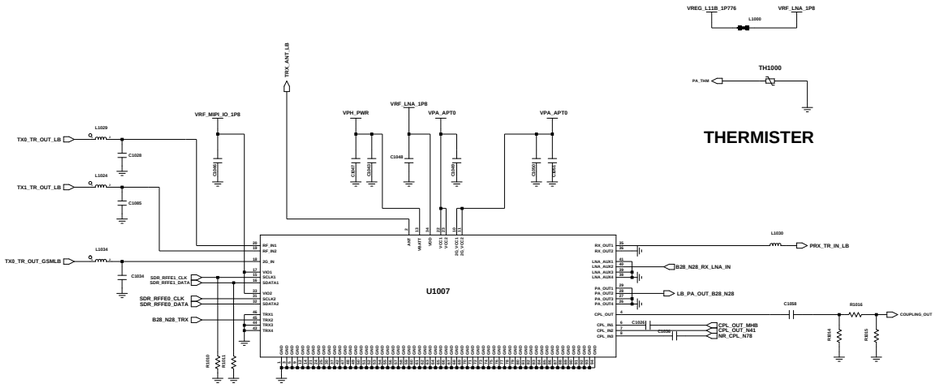

LB L-PAMiD

MAIN ANT2 HB, N7/N41 TRX

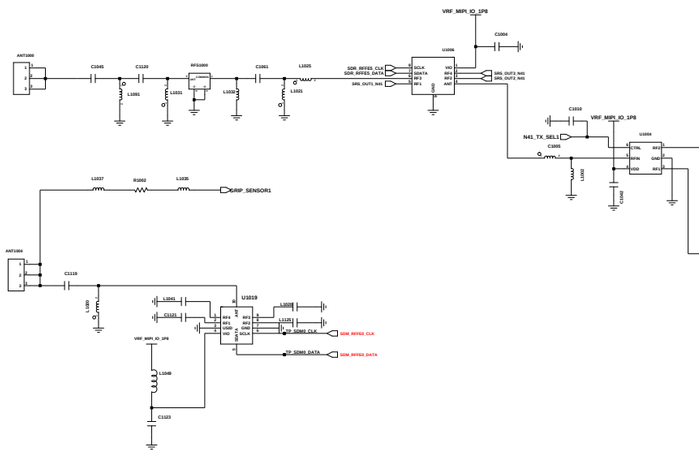

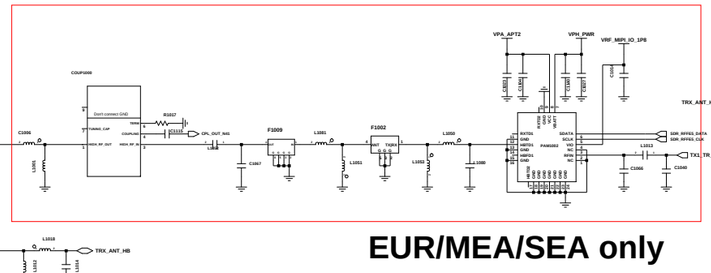

EUR/MEA/SEA only

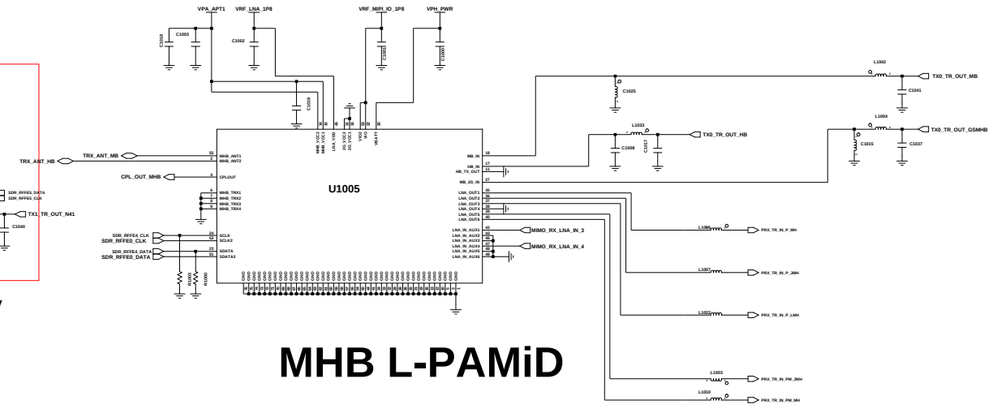

MHB L-PAMiD

SUB ANT1 LMHB DRX, n7/n41 DRX

MAIN ANT3 n7/n41 DRX MIMO

MAIN ANT4 n78 DRX MIMO

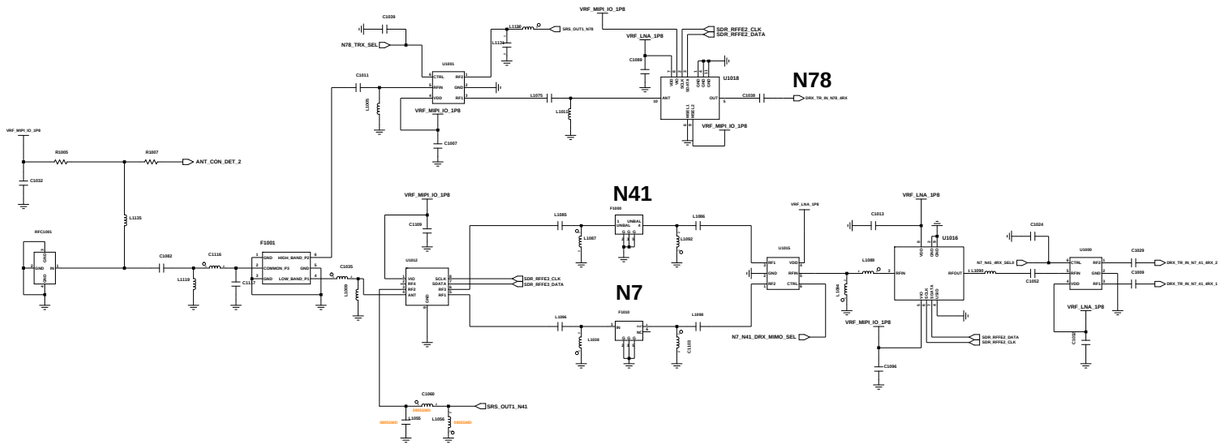

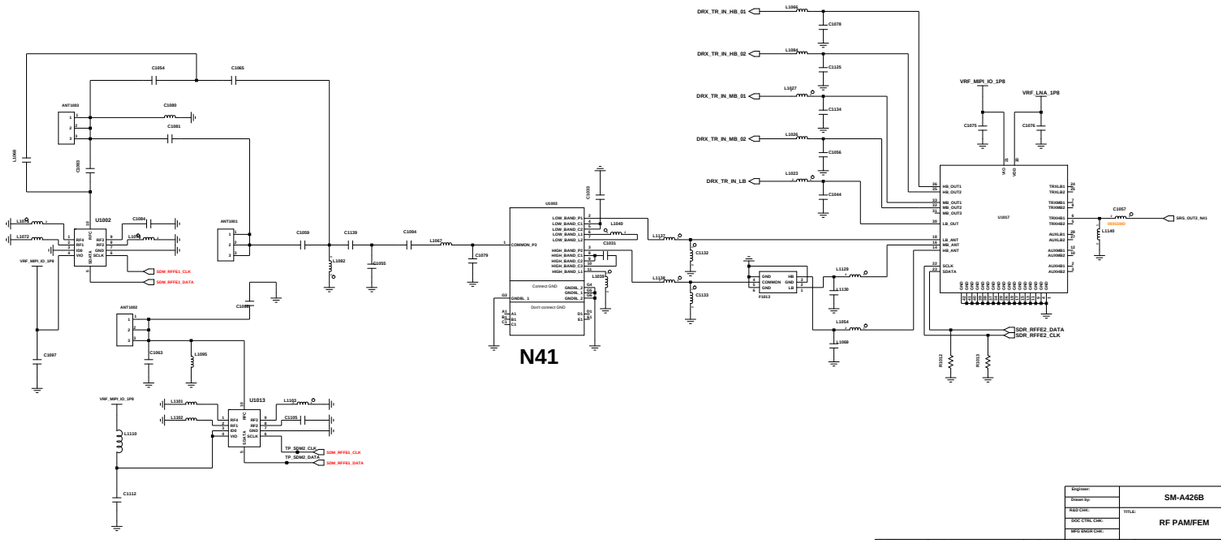

Engineer:	SM-A426B
Drawn by:	
R&D CHK:	TITLE: RF PAM/FEM
DOC CTRL CHK:	
MFG DOCUM CHK:	
Changed by: / Date Changed: / Time Changed:	QA CHK: / REV: / Drawing Number:

SAMSUNG CONFIDENTIAL
THIS DOCUMENT CONTAINS CONFIDENTIAL
AND PROPRIETARY INFORMATION OF
SAMSUNG ELECTRONICS. THIS PROPERTY
DO NOT DISCLOSE TO OR DUPLICATE FOR OTHERS
EXCEPT AS AUTHORIZED BY SAMSUNG.

TRANSCEIVER(SDR735)

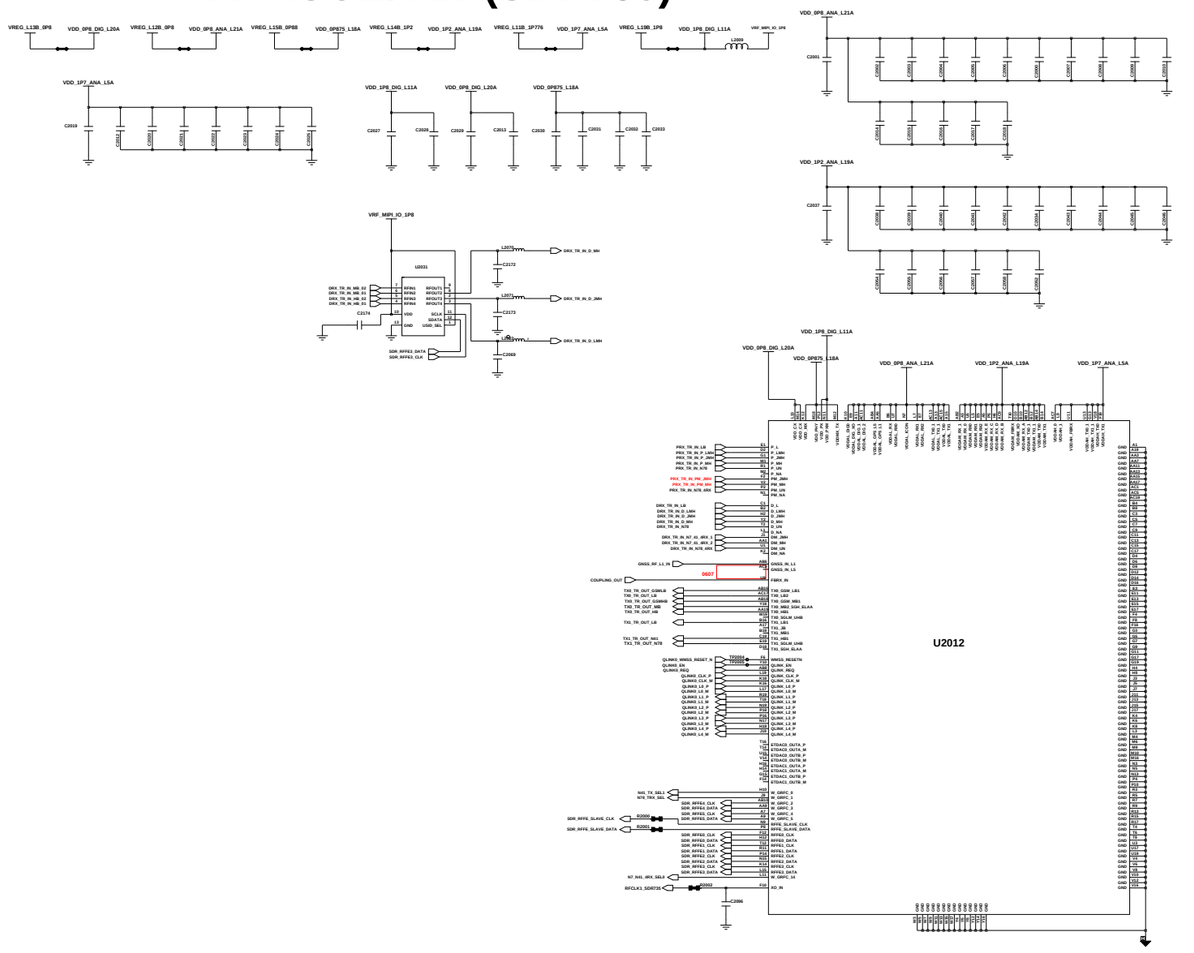

SUB ANT2 n7/n41 PRX MIMO, n78 PRX MIMO

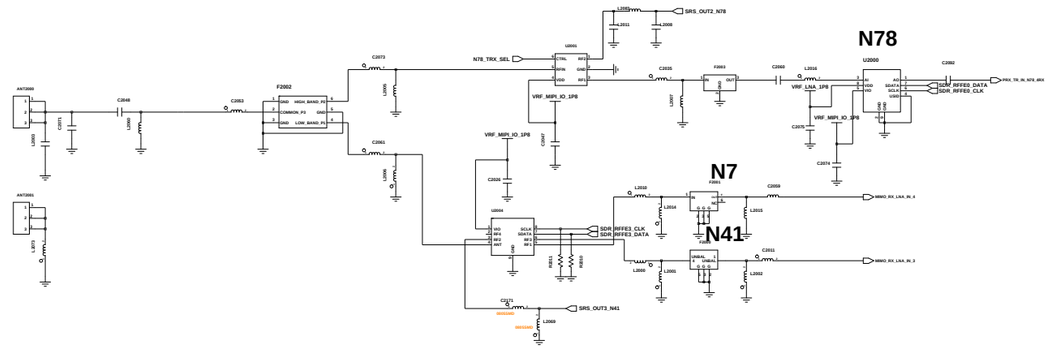

SUB ANT3 n78 DRX

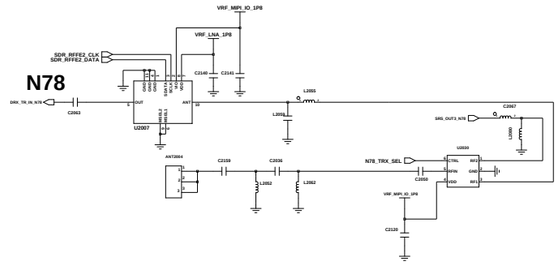

APT0

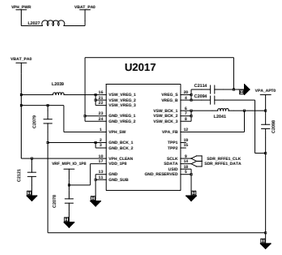

APT1

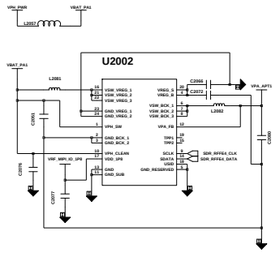

APT2

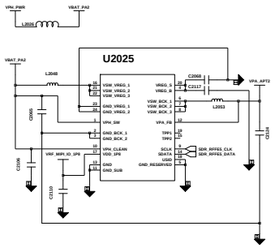

SUB ANT4 N78 TRX

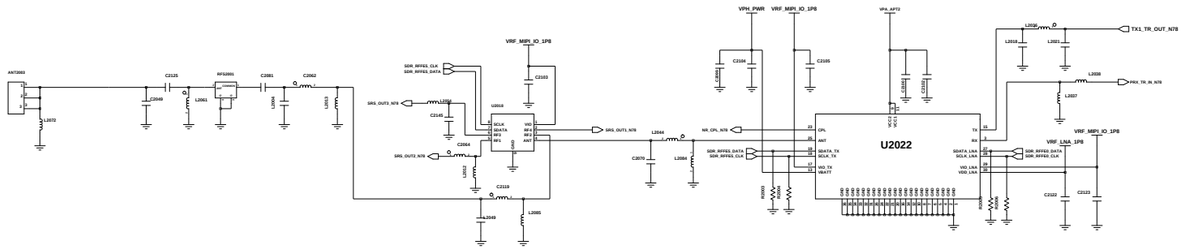

Engineer:	SM-A426B
Issued by:	
R&D Code:	TITLE: RF TRCV/PAM/APT
MOC & TSS Code:	
SPE Issue Code:	
QA Code:	Sheet / Total:
	Rev: Drawing Number:

Changed by: | Date Changed: | Date Changed:

SAMSUNG CONFIDENTIAL
THIS DOCUMENT CONTAINS CONFIDENTIAL
PROPRIETARY INFORMATION THAT IS
SAMSUNG ELECTRONICS CO'S PROPERTY.
DO NOT DISCLOSE TO OR DUPLICATE FOR OTHERS
EXCEPT AS AUTHORIZED BY SAMSUNG.

WIFI/BT/FM

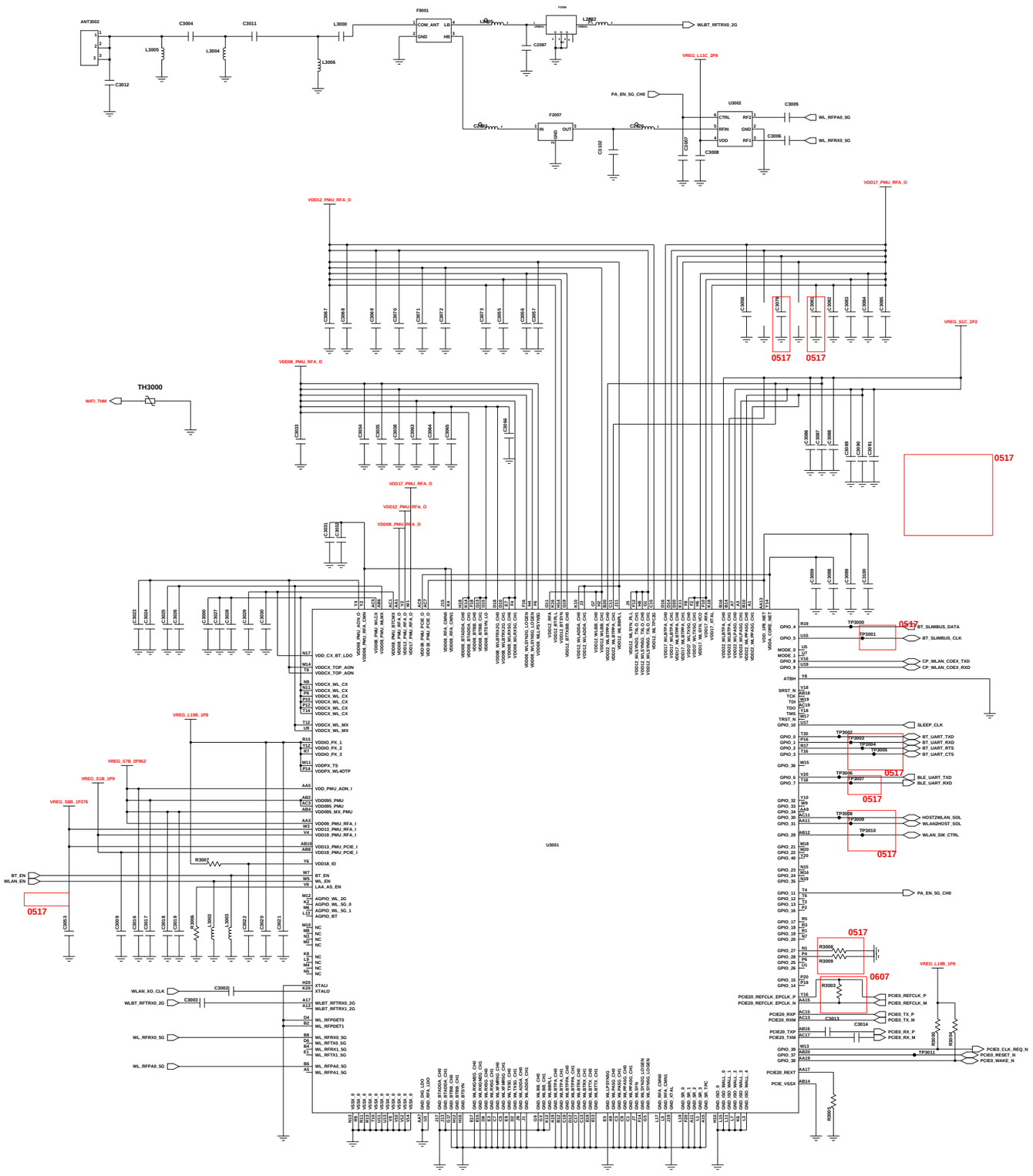

GPS L1 / GNSS/BEIDOU

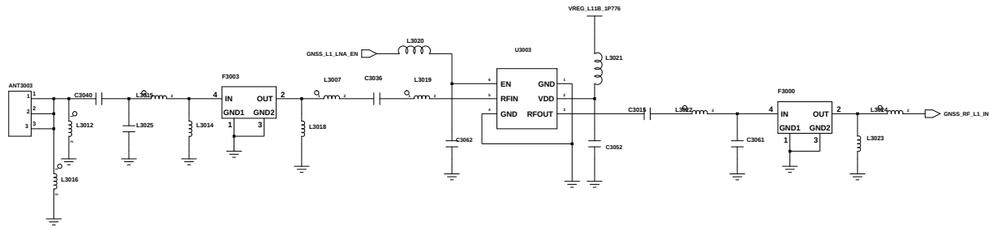

GND CCP

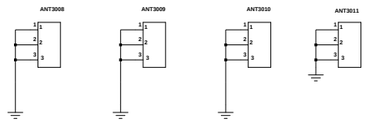

NFC

UICC : RN4V

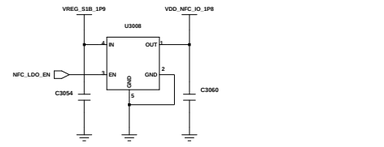

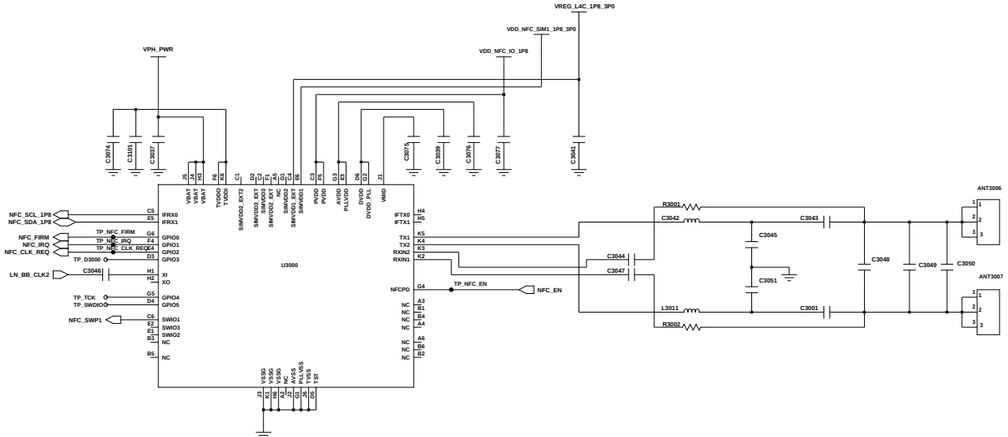

Engineer:	SM-A426B		
Drawn by:			
R&D CHK:	TITLE: WIFI/NFC/MST/GPS	Size:	
DOC CTRL CHK:			
MFG ENGR CHK:			

Changed by:	Date Changed:	Time Changed:	QA CHK:	REV	Drawing Number:	Page:
user118						3

SAMSUNG CONFIDENTIAL
THIS DOCUMENT CONTAINS CONFIDENTIAL PROPRIETARY INFORMATION THAT IS SAMSUNG ELECTRONICS CO'S PROPERTY. DO NOT DISCLOSE TO OR DUPLICATE FOR OTHERS EXCEPT AS AUTHORIZED BY SAMSUNG.

SM7325

(INTERFACE, GPIO)

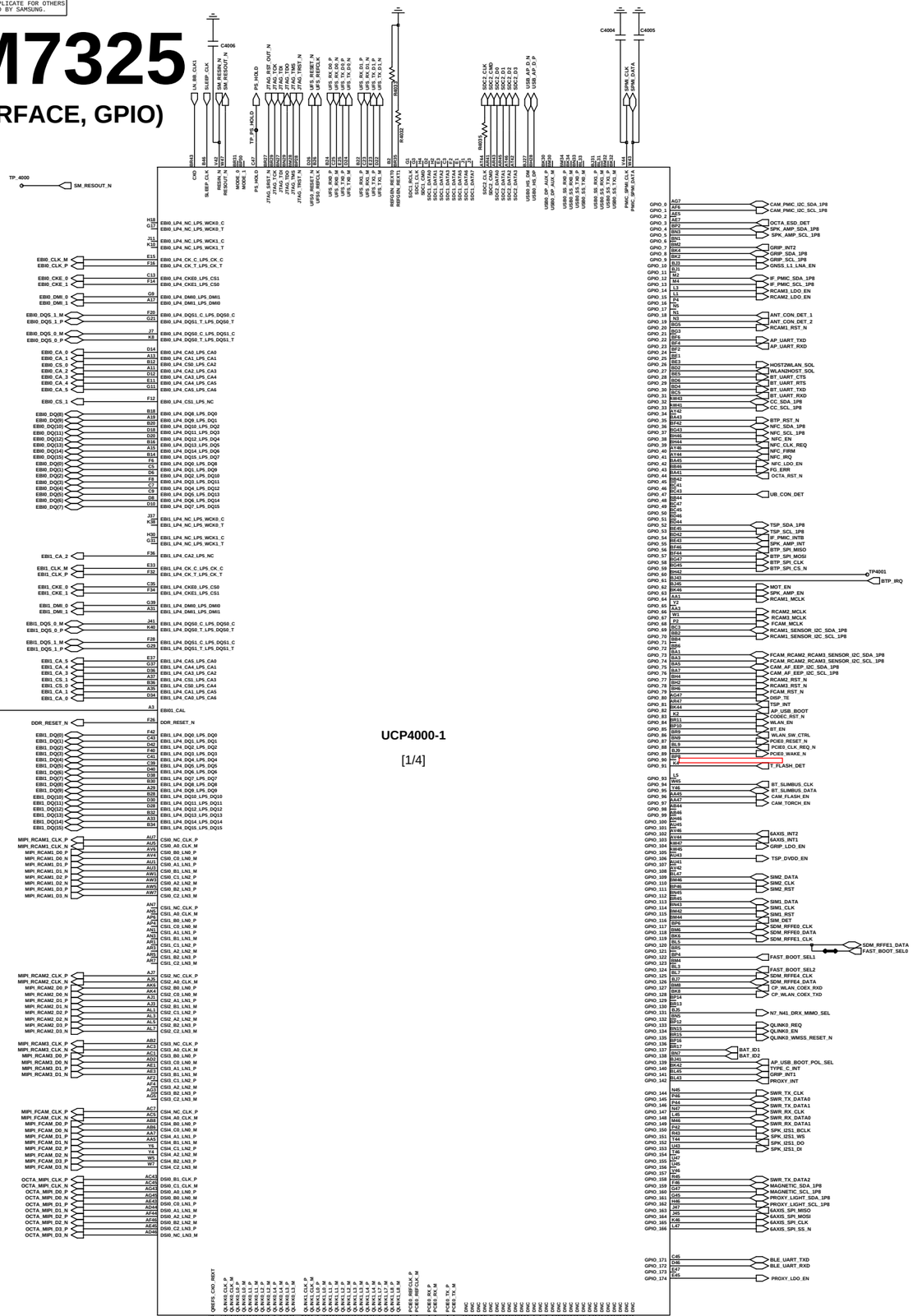

I2C PULL UP

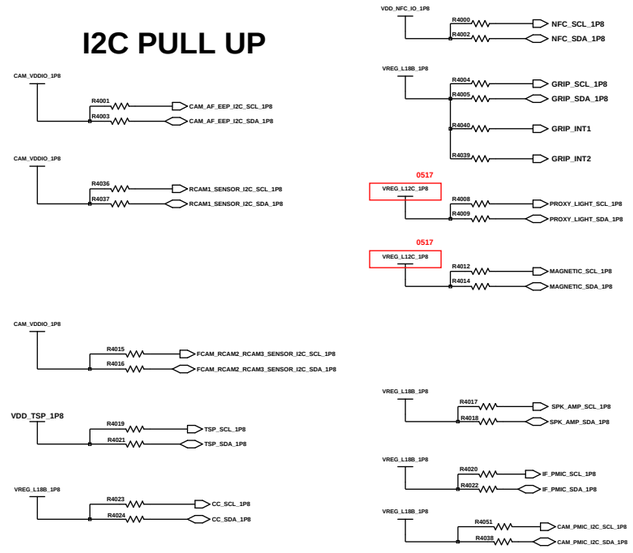

MEMORY

6GB/128GB R4025

8GB/128GB R4026 NC

REGION

BR : EUR/ME R4050

B : SWA/CIS/LA R4049 NC

2D BARCODE

CON4000 CON4001 SMD NC

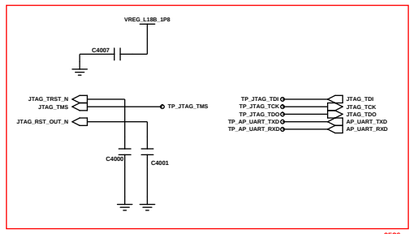

JTAG CON

(3711-001713 / AXE612124)

BOSS HOLE

BH4007

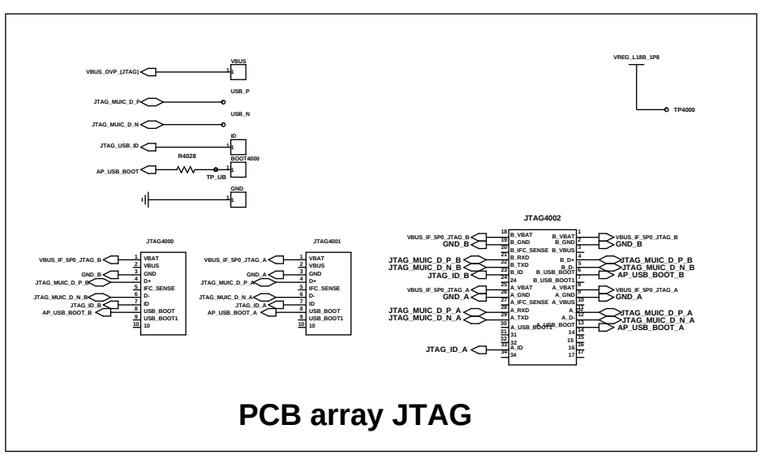

PCB array JTAG

Engineer	SM-A426B
Drawn by:	
R&D CHK:	TITLE: AP/CP
DOC CTRL CHK:	Size
MFG ENGR CHK:	
QA CHK:	Drawing Number

Changed by: | Date Changed: | Time Changed:

SAMSUNG CONFIDENTIAL
THIS DOCUMENT CONTAINS CONFIDENTIAL
AND PROPRIETARY INFORMATION OF
SAMSUNG ELECTRONICS CO. LTD.
DO NOT DISCLOSE TO OR DUPLICATE FOR OTHERS
EXCEPT AS AUTHORIZED BY SAMSUNG.

SM7325
(POWER, GND)

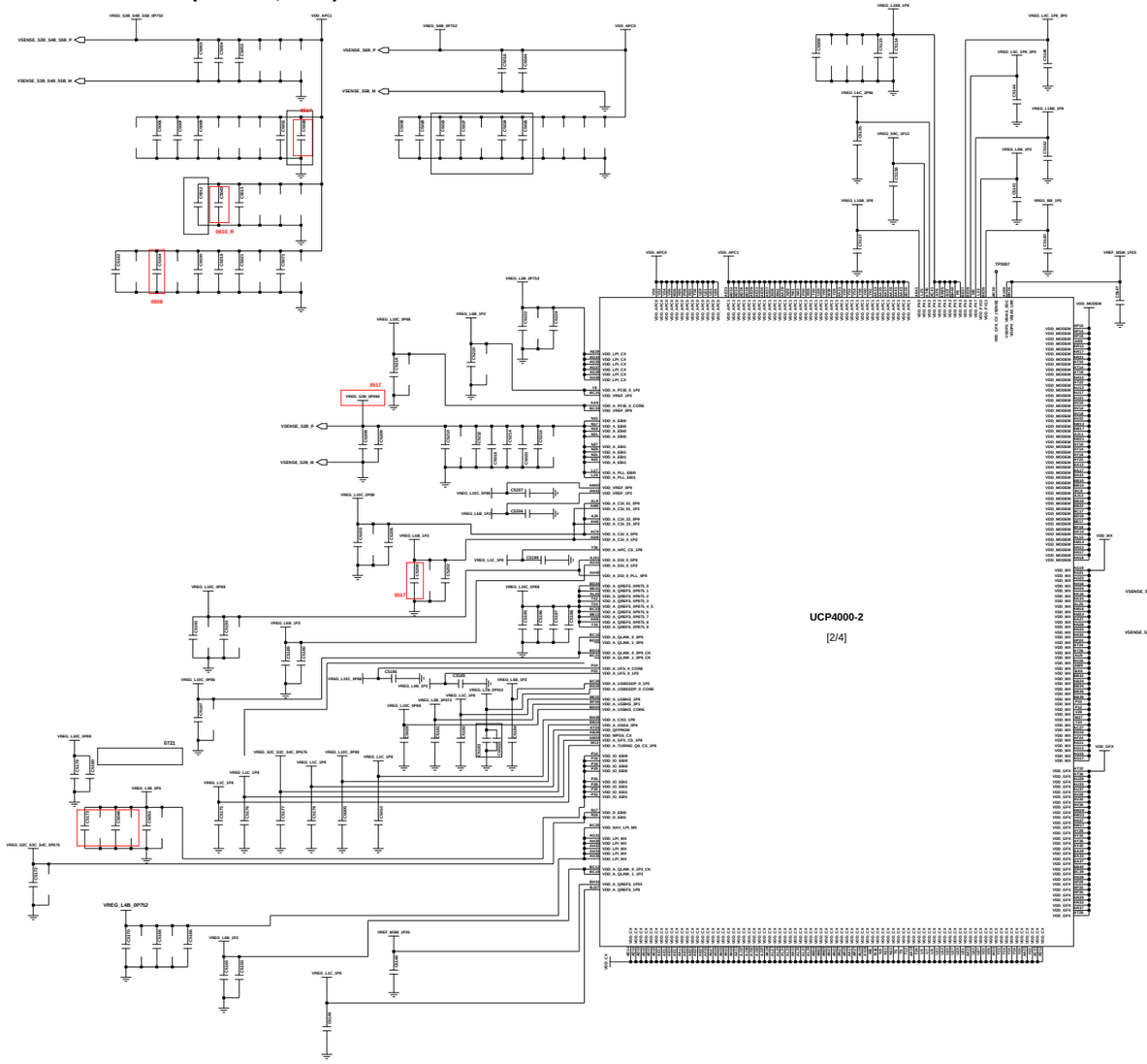

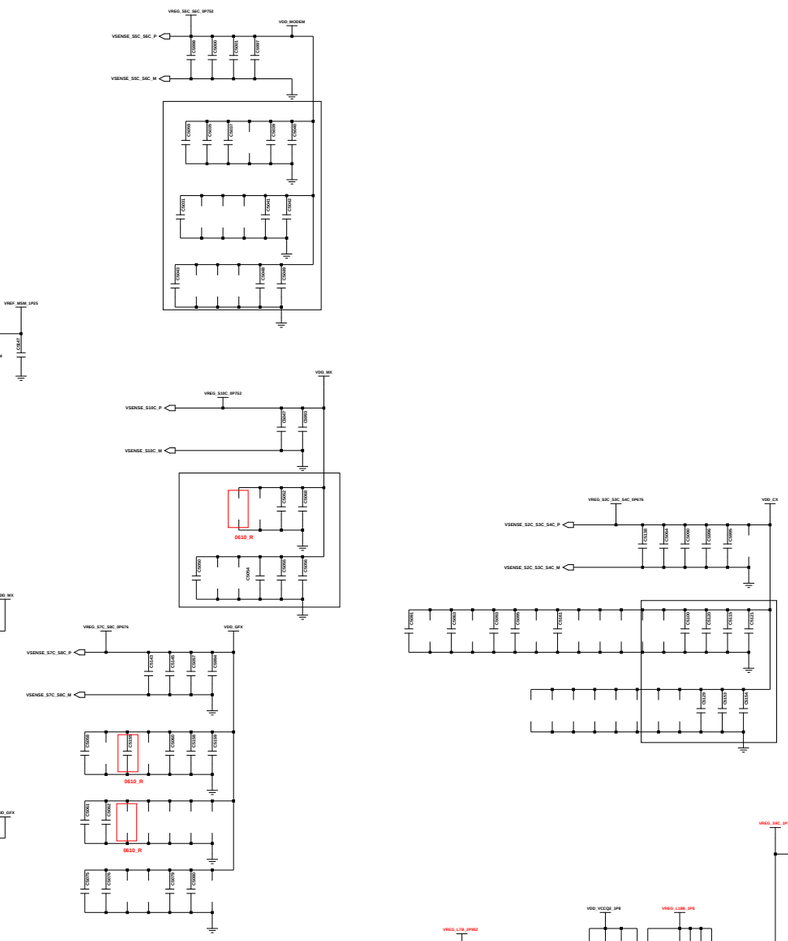

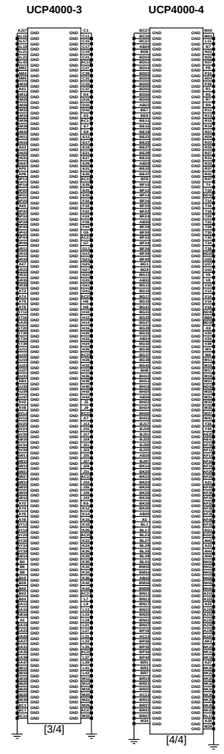

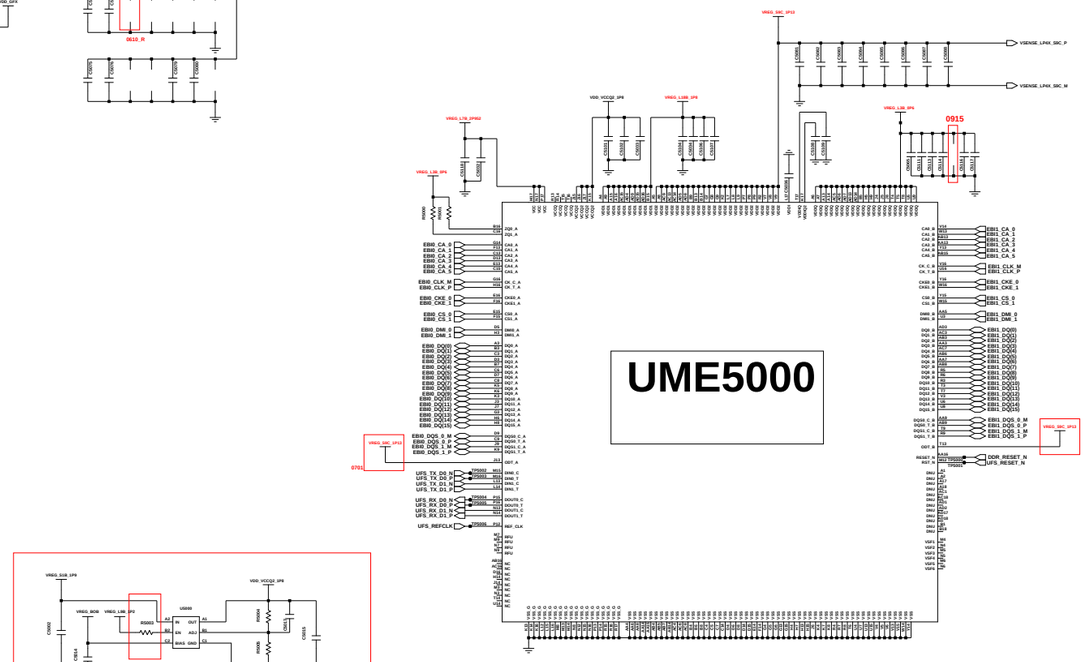

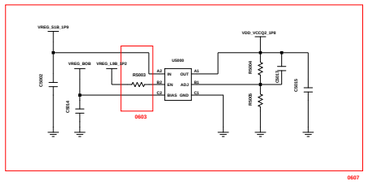

6GB + 128GB uMCP

6GB + 128GB uMCP : 1108-000677
8GB + 128GB uMCP : 1108-000675

Engineer:	A52 5G
Drawn by:	
R&D Coord.:	TITLE: AP/CP/uMCP
DOC CTRL Coord.:	
MFG SOCIE Coord.:	

Changed by: | Date Changed: | Time Changed: | QA Chkd.: | REV: | Drawing Number:

SAMSUNG CONFIDENTIAL
THIS DOCUMENT CONTAINS CONFIDENTIAL
AND PROPRIETARY INFORMATION OF
SAMSUNG ELECTRONICS CO'S PROPERTY.
DO NOT DISCLOSE TO OR DUPLICATE FOR OTHERS
EXCEPT AS AUTHORIZED BY SAMSUNG.

PMIC (PM7325/PM7350C)

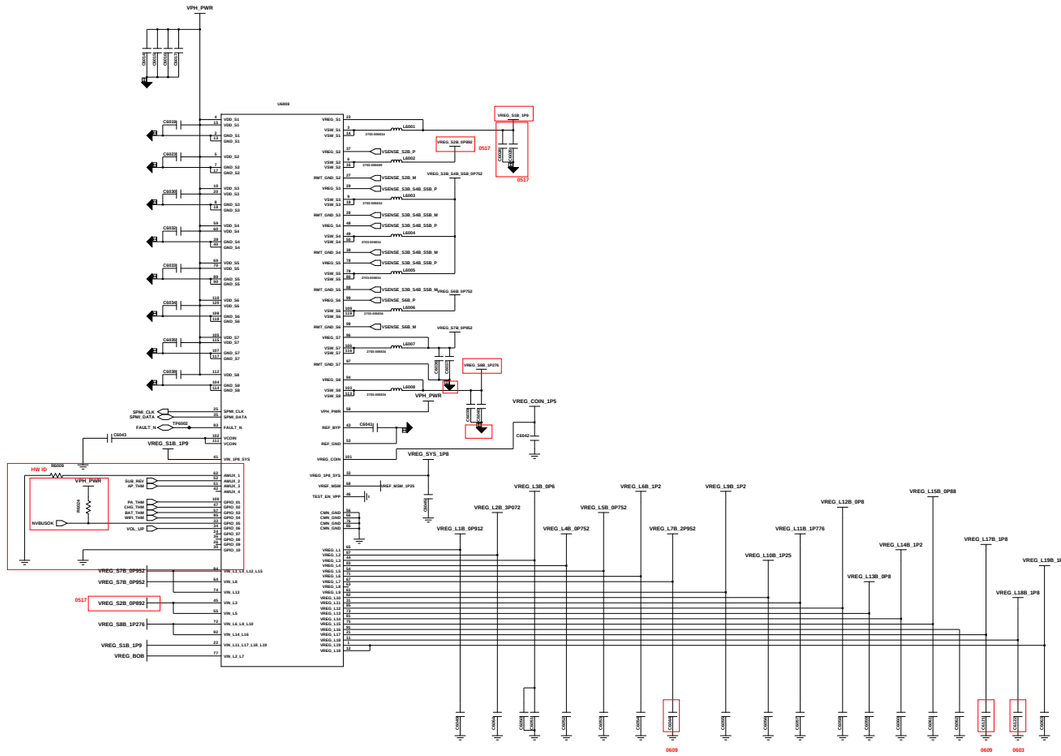

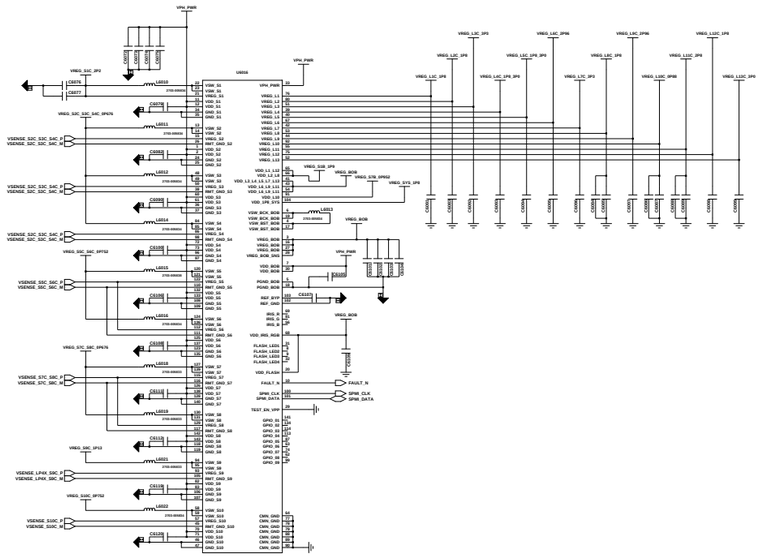

H/W ID TABLE

HW ID	REV	VALUE	COMMENT
00	REV00	12K	BRING UP
01	REV01 REV01A	20K	SM7325_BU DV2
02	REV02A	30K	RF_TEST
03	REV02B	39K	PV1
	~~REV02C~~	~~51K~~	~~RF_SW~~
04	REV02C	68K	RF_SW
05	REV03 REV03A	82K	PV2
06		100K	
07		120K	
08		150K	
09		200K	

2007-007590
2007-009157

DIRECT CHARGER

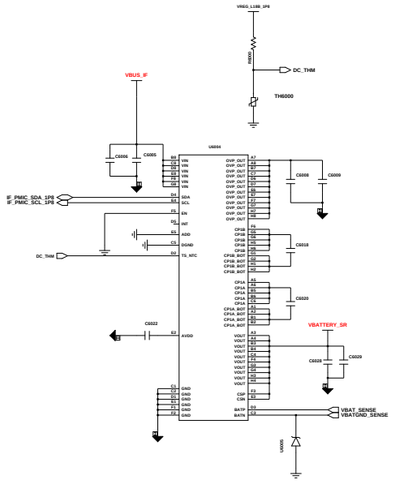

IF PMIC

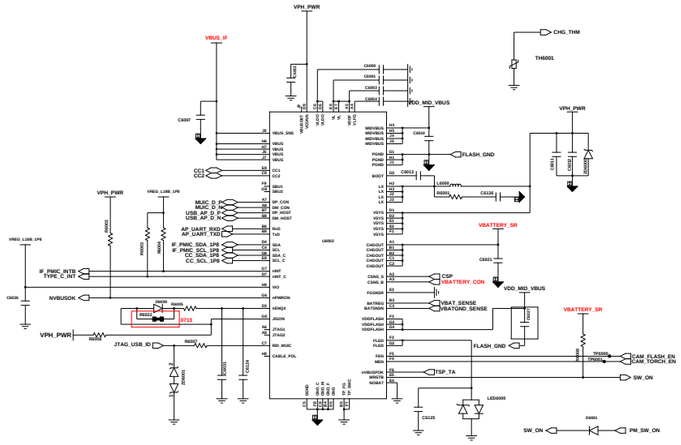

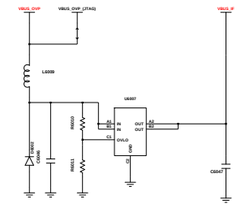

OVP

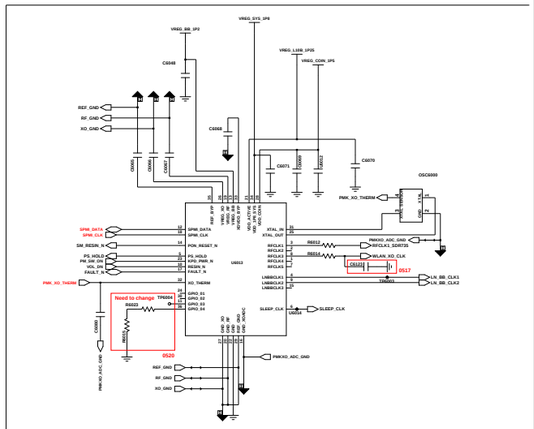

CLOCK GEN

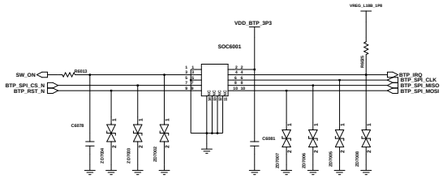

BTP SENSOR & PWR KEY

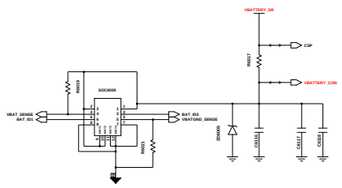

BATTERY CON

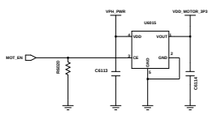

MOTOR

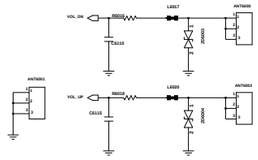

VOL KEY

Engineer:	SM-A426B
Drawn by:	
R&D Code:	TITLE: POWER/MOT/KEY
SOC Code:	
MFG SOCE Code:	
QA Code:	REV: Drawing Number:

Changed by: | Date Changed: | Time Changed:

SAMSUNG CONFIDENTIAL
THIS DOCUMENT CONTAINS CONFIDENTIAL PROPRIETARY INFORMATION THAT IS SAMSUNG ELECTRONICS CO'S PROPERTY. DO NOT DISCLOSE TO OR DUPLICATE FOR OTHERS EXCEPT AS AUTHORIZED BY SAMSUNG.

AUDIO & SENSOR PART

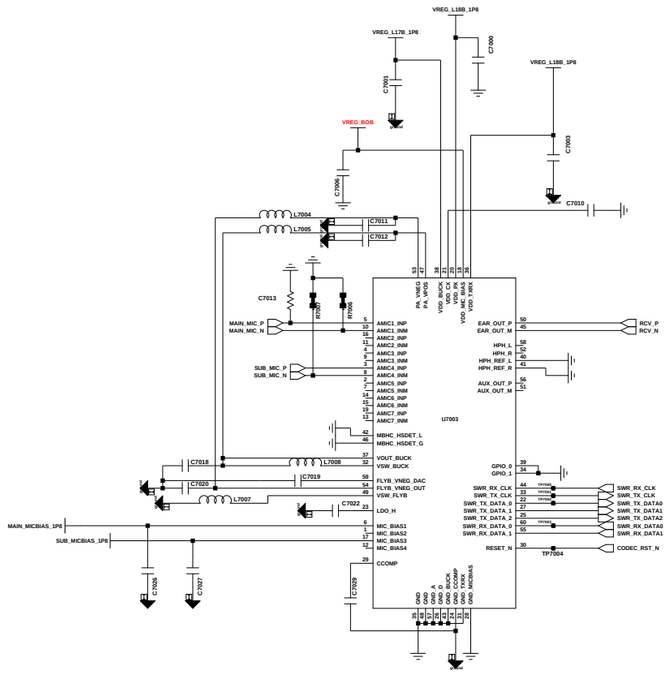

CODEC

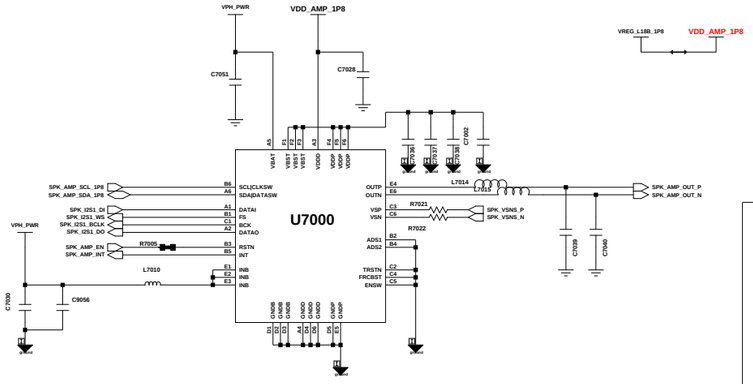

SPK AMP

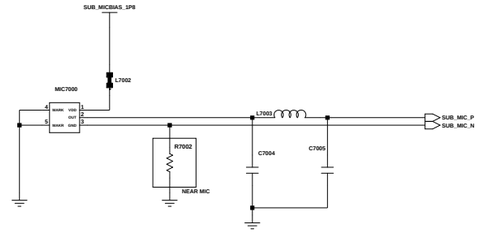

2nd MIC

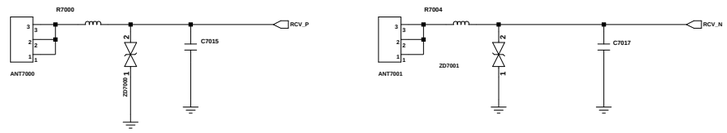

RCV CONTACT

SENSOR

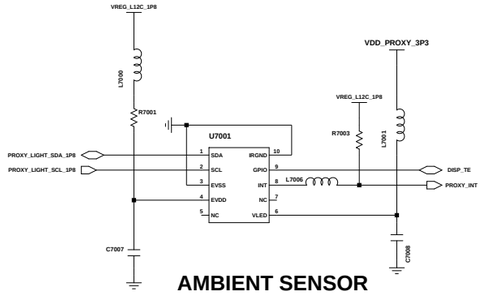

AMBIENT SENSOR

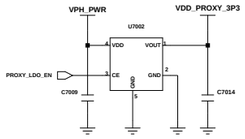

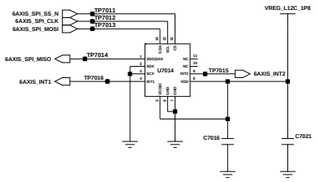

ACC&GYRO SENSOR

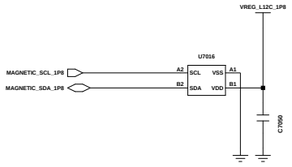

MAGNETIC SENSOR

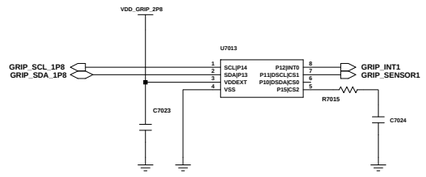

GRIP sensor1

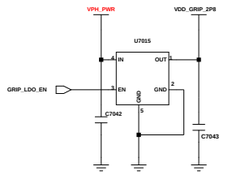

DUAL SIM / T-FLASH (3in2)

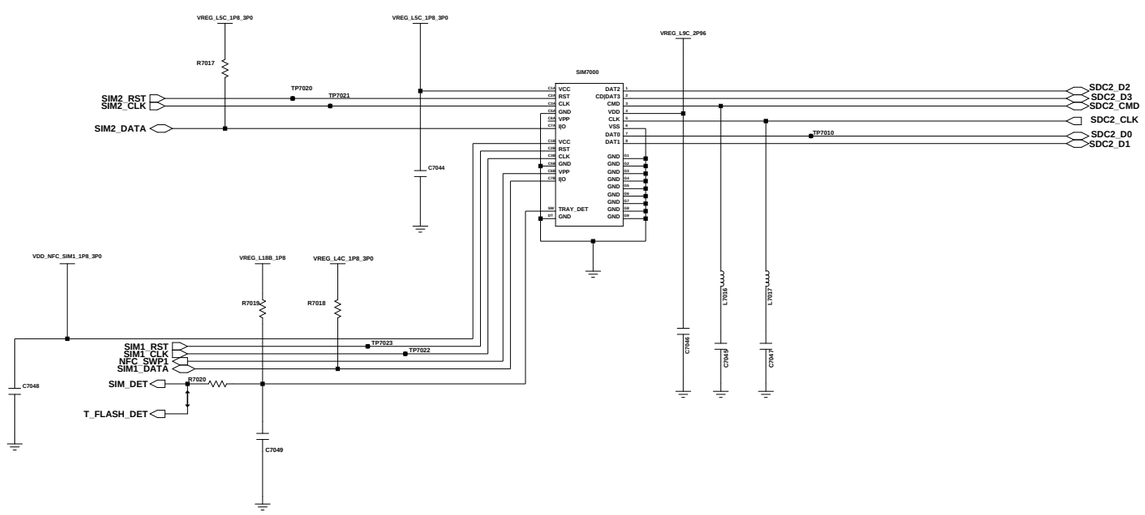

Engineer:	SM-A426B
Drawn by:	
R&D CHK:	TITLE: AUDIO/SIM&SD/SENSOR
DOC CTRL CHK:	
MFG ENGR CHK:	

Changed by: | Date Changed: | Time Changed: | QA CHK: | REV | Drawing Number: | Page:

SAMSUNG CONFIDENTIAL
THIS DOCUMENT CONTAINS CONFIDENTIAL
PROPRIETARY INFORMATION THAT IS
SAMSUNG ELECTRONICS CO'S PROPERTY.
DO NOT DISCLOSE TO OR DUPLICATE FOR OTHERS
EXCEPT AS AUTHORIZED BY SAMSUNG.

CAMERA

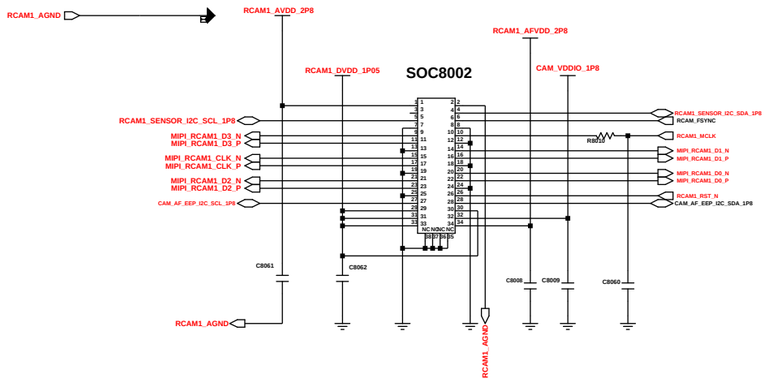

RCAM1_64M GW3(34PIN)

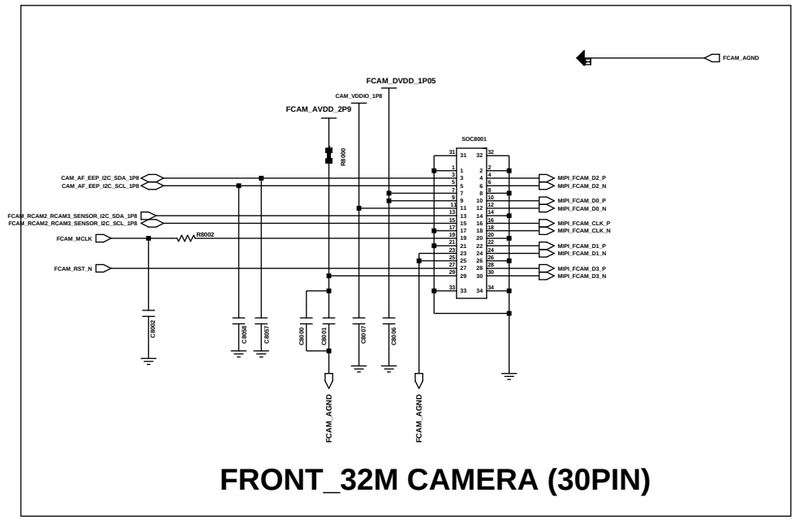

FRONT_32M CAMERA (30PIN)

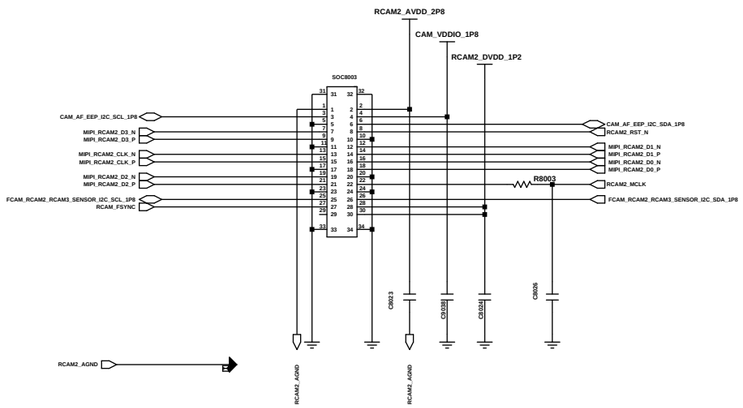

RCAM2_SUPER WIDE_12M CAMERA(30pin)

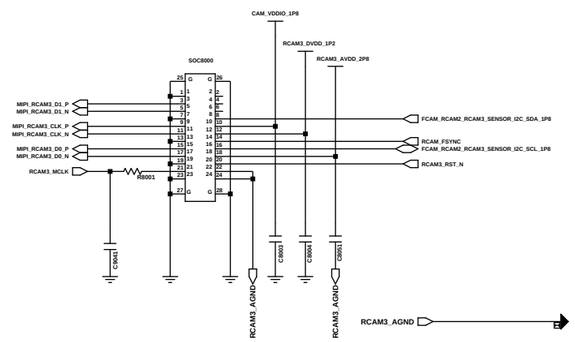

RCAM3_5M MACRO CAMERA(24PIN)

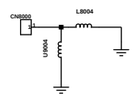

CAM PMIC

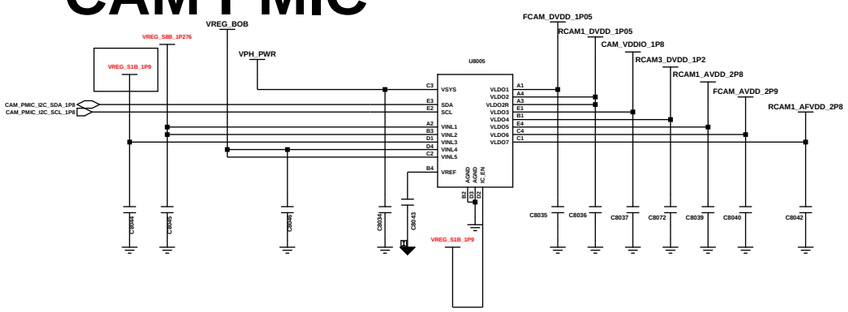

RCAM1_ISP_ IC

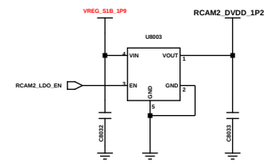

RCAM1_ISP_DVDD

RCAM1_ISP_AVDD

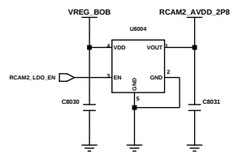

RCAM2_DVDD

RCAM2_AVDD

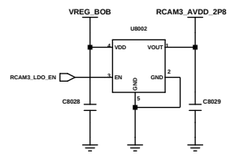

RCAM3_AVDD

Engineer:	SM-A426B		
Drawn by:			
R&D CHK:	TITLE: CAMERA	Size:	
DOC CTRL CHK:			
MFG ENGR CHK:			
QA CHK:	REV:	Drawing Number:	Page: 78

Changed by: | Date Changed: | Time Changed:

SAMSUNG CONFIDENTIAL
THIS DOCUMENT CONTAINS CONFIDENTIAL PROPRIETARY INFORMATION THAT IS SAMSUNG ELECTRONICS CO'S PROPERTY. DO NOT DISCLOSE TO OR DUPLICATE FOR OTHERS EXCEPT AS AUTHORIZED BY SAMSUNG.

C2C (Conn to Conn FPCB)

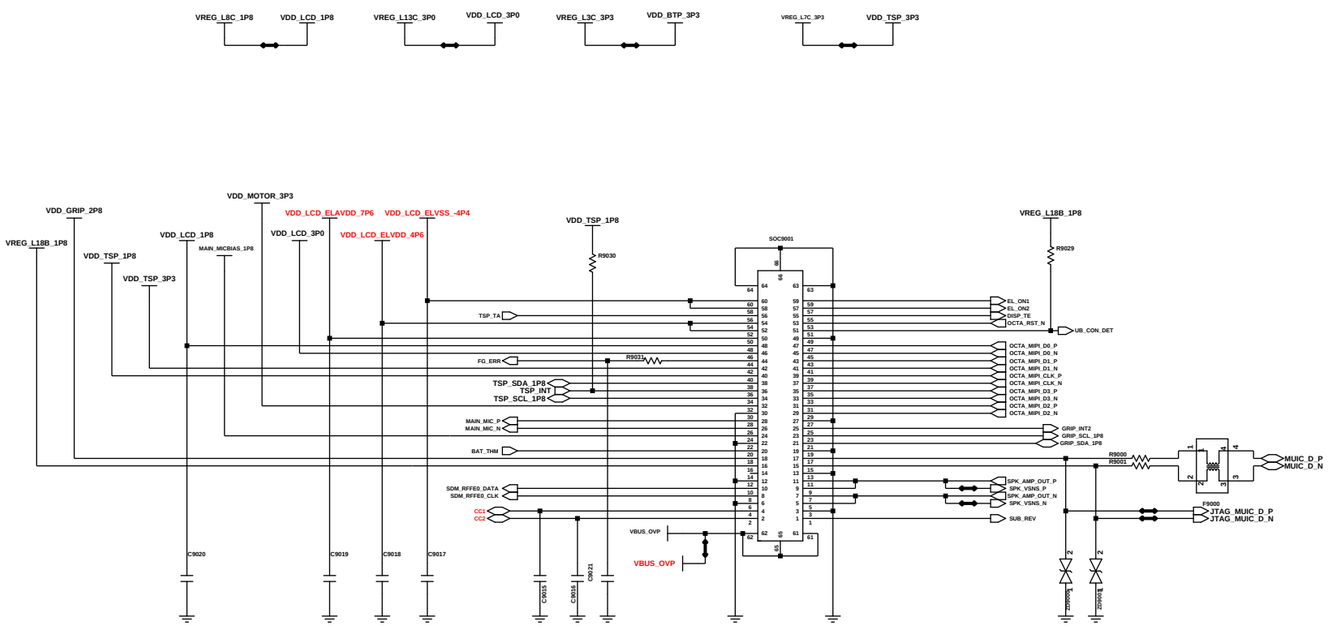

SHIELD CAN/BOTH HOLE

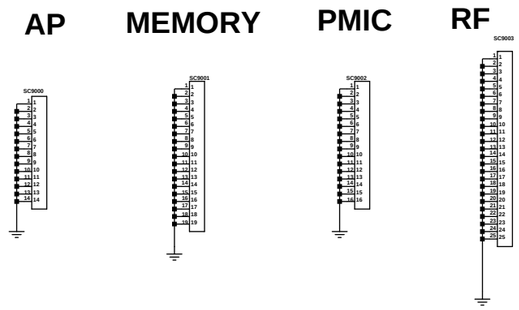

DISPLAY

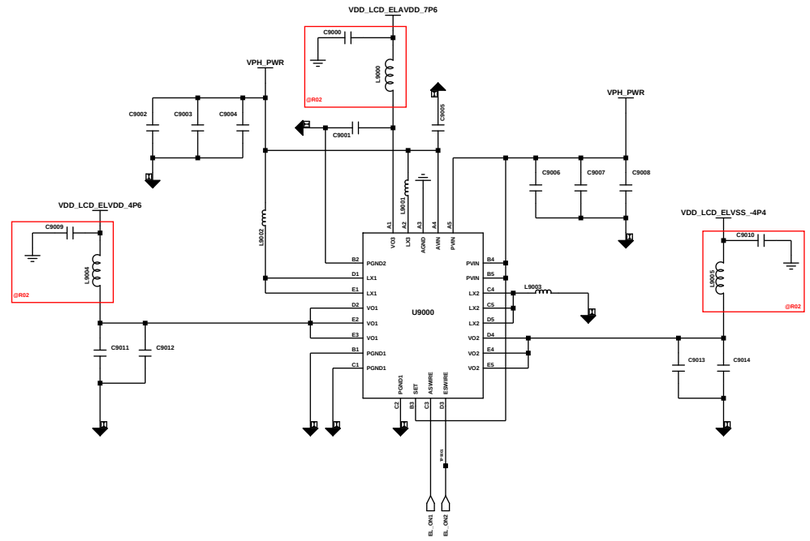

DISPLAY PMIC

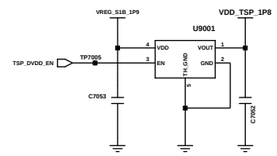

TSP LDO

Engineer:	SM-A426B
Drawn by:	
R&D CHK:	TITLE: MAIN CON/OCTA DCDC
DOC CTRL CHK:	Size:
MFG ENGR CHK:	
QA CHK:	REV: Drawing Number: Page:

Changed by: user29 | Date Changed: Thursday, June 18, 2015 | Time Changed: 10:18:28 am

SM-M526BR

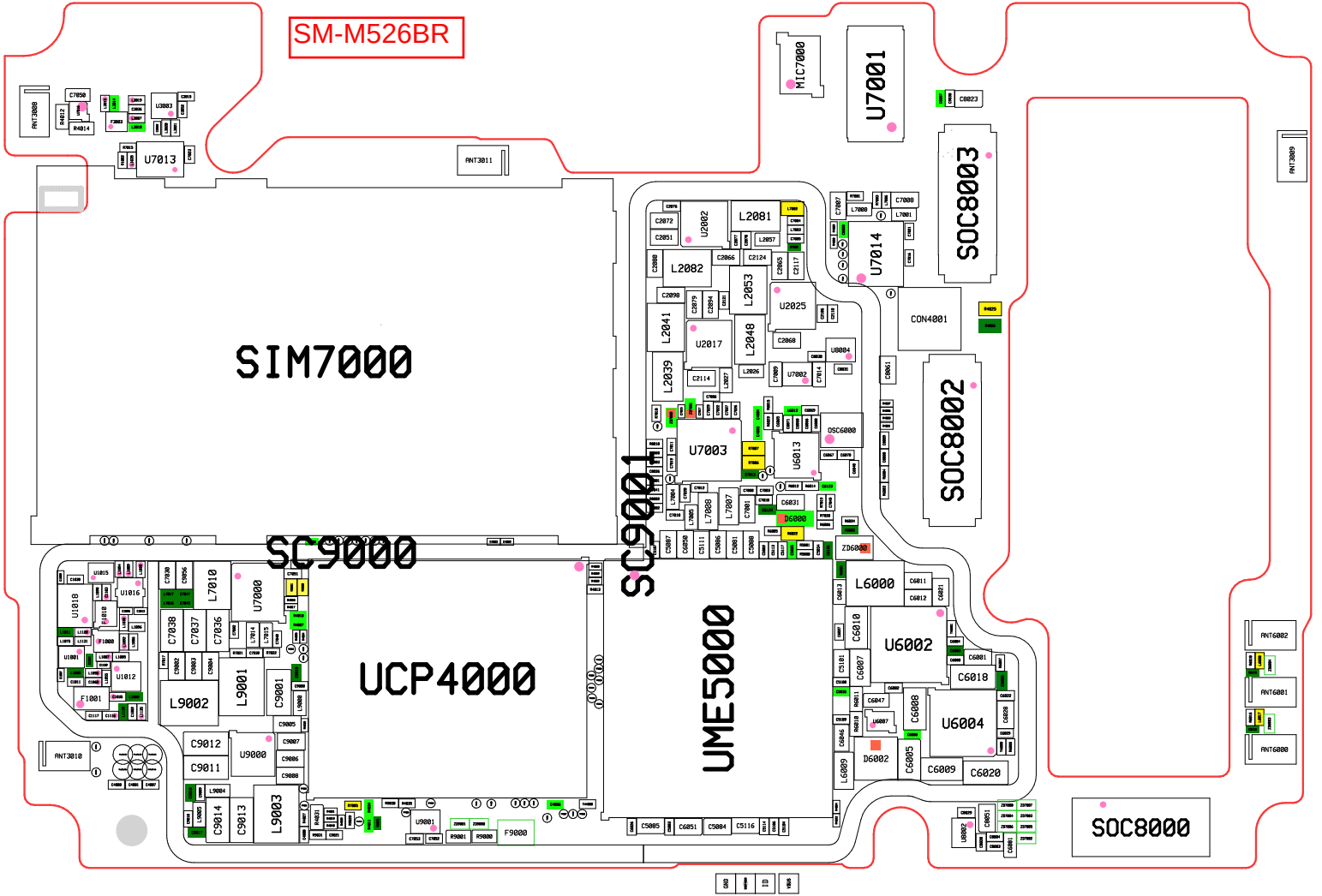
SIM7000
SC9000
UCP4000
SC9001
UME5000
SOC8000
SOC8002
SOC8003
U7001
MIC7000
U7013
U7014
U2002
L2081
L2082
L2053
U2025
L2041
U2017
L2048
L2039
U8004
U7002
U7003
U6013
OSC6000
CON4001
D6000
ZD6000
L6000
U6002
U6004
D6002
C6009
C6020
C6018
L7010
U7000
L9001
L9002
C9001
U9000
L9003
F9000
U9001
ANT3008
ANT3011
ANT3009
ANT3010
ANT6002
ANT6001
ANT6000

SM-M526BR

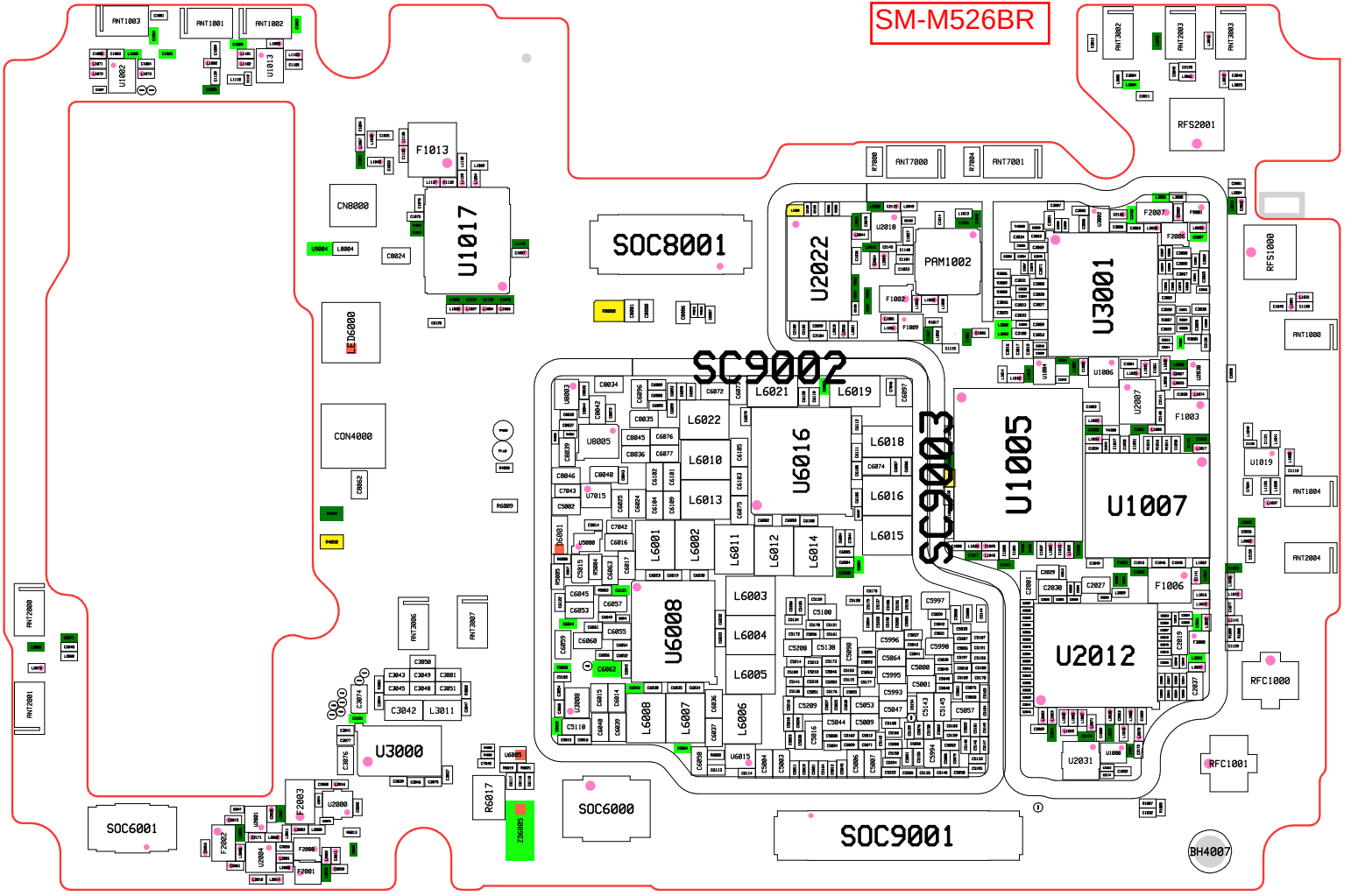
ANT1003
ANT1001
ANT1002
U1002
U1013
F1013
U1017
CN8000
C8824
LED6000
CON4000
SOC8001
SC9002
SC9003
U2022
PAM1002
U3001
U1005
U1007
U2012
U6016
U6008
RFS2001
RFS1000
ANT1000
ANT1004
ANT2004
RFC1000
RFC1001
BH4007
U1019
U1006
U2007
F1003
F1006
U2031
ANT7000
ANT7001
ANT3002
ANT3003
ANT3006
ANT3007
ANT2000
ANT2001
U3000
SOC6001
SOC6000
SOC9001
RG017
ZS005
U2000
F2003
F2002
E2001

SM-M526BR

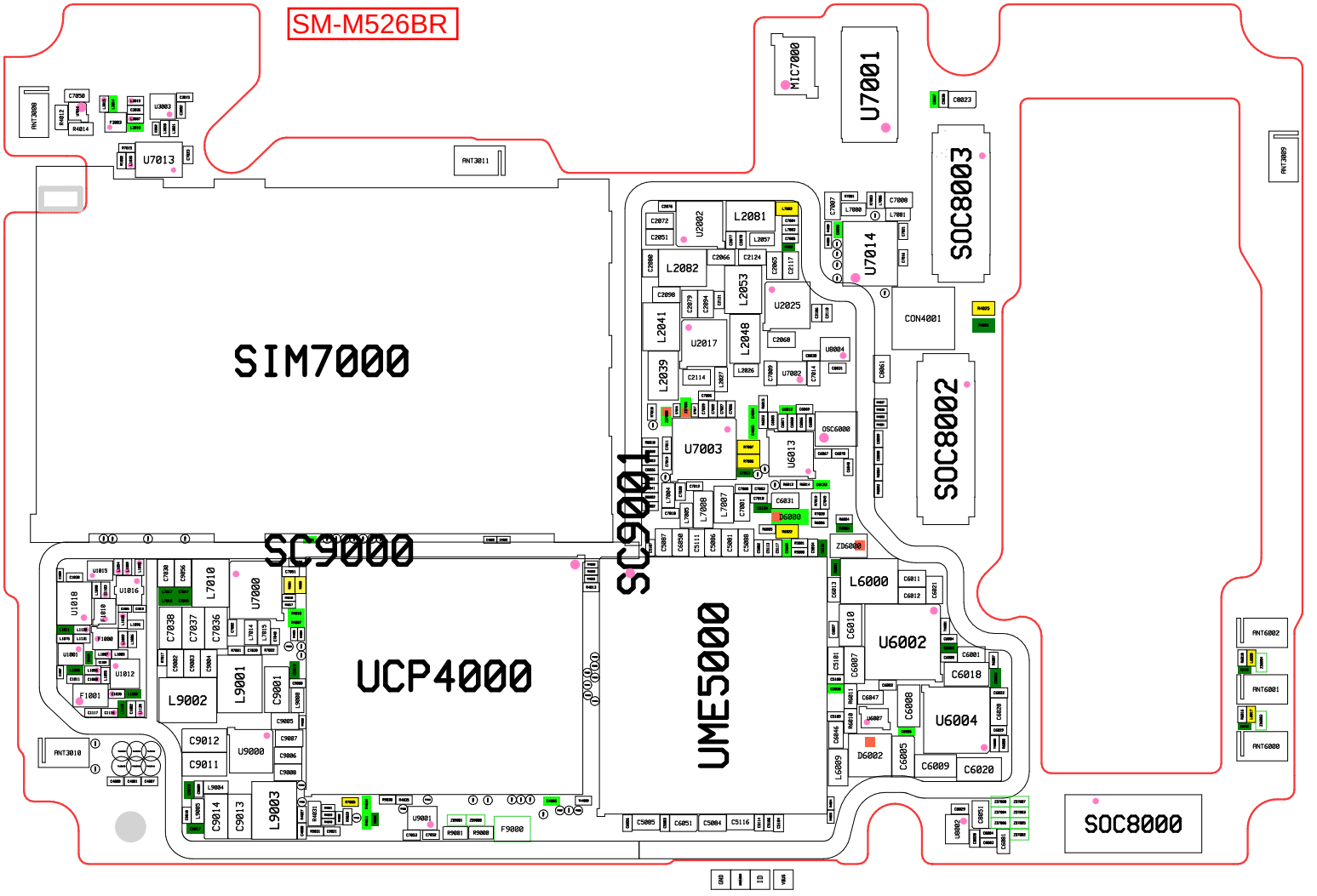
SIM7000
SC9000
UCP4000
SC9001
UME5000
SOC8003
SOC8002
SOC8000
U7001
MIC7000
U7013
U7014
U7003
U6013
U6002
U6004
U7000
L7010
L9001
L9002
L9003
U9000
U9001
F9000
D6000
D6002
ZD6000
CON4001
OSC6000
U2002
L2081
L2082
L2053
U2025
L2041
U2017
L2048
L2039
U7002
U8004
L6000
C6018
C6020
C6009
C6005
C6008
C6007
C6010
ANT3008
ANT3011
ANT3009
ANT3010
ANT6002
ANT6001
ANT6000

SM-M526BR

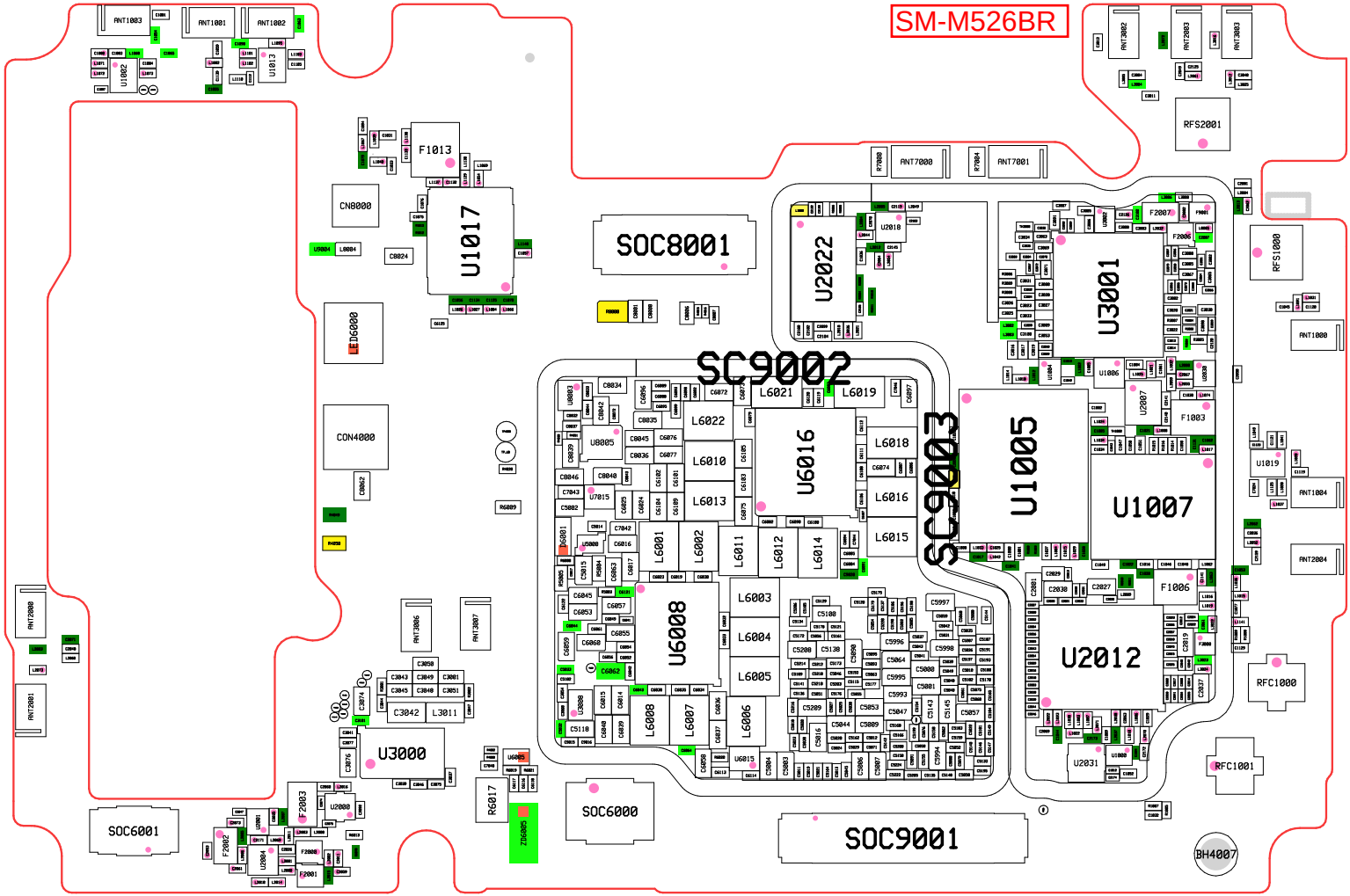
ANT1003
ANT1001
ANT1002
U1002
U1013
ANT3002
ANT2003
ANT3003
RFS2001
F1013
CN8000
U1017
SOC8001
ANT7000
ANT7001
U2022
U3001
RFS1000
ANT1000
U1006
U2007
F1003
U1019
ANT1004
ANT2004
SC9002
SC9003
U1005
U1007
F1006
U2012
U2031
RFC1000
RFC1001
BH4007
CON4000
ANT3006
ANT3007
ANT2000
ANT2001
U3000
SOC6001
F2003
U2000
F2002
F2001
R6017
SOC6000
SOC9001
U6016
U6008
L6021
L6019
L6022
L6010
L6013
L6018
L6016
L6015
L6001
L6002
L6011
L6012
L6014
L6003
L6004
L6005
L6006
L6007
U8005
U7015
U6015